California Environmental Protection Agency

Air Resources Board

Vapor Recovery Test Procedure

TP- 201.4

Dynamic Back Pressure

Adopted: April 12, 1996
Amended: April 28, 2000
Amended: July 3, 2002

California Environmental Protection Agency
Air Resources Board

Vapor Recovery Test Procedure

TP-201.4

Dynamic Back Pressure

Definitions common to all certification and test procedures are in:

D-200 Definitions for Vapor Recovery Procedures

For the purpose of this procedure, the term "CARB" refers to the California Air Resources Board, and the term "Executive Officer" refers to the CARB Executive Officer, or his or her authorized representative or designate.

1. PURPOSE AND APPLICABILITY

1.1 This procedure is used to verify the applicable dynamic back pressure limits imposed on any gasoline vapor recovery system. The methodologies in this procedure are applicable for certification and compliance testing.

1.1.1 **Methodology 1**. This procedure is applicable if the dynamic back pressure standards are imposed from the nozzle to the gasoline storage tank, provided remote vapor check valves are not part of the Phase II system.

1.1.2 **Methodology 2**. This procedure is applicable if the dynamic back pressure standards are imposed from the nozzle to the gasoline storage tank and a remote vapor check valve is installed.

1.1.3 **Methodology 3**. This procedure is applicable if the dynamic back pressure standards are imposed from the nozzle to the gasoline storage tank and a remote vapor check valve that can be disabled by removing the poppet on the fuel side is installed.

1.1.4 **Methodology 4**. This procedure is applicable if the dynamic back pressure standards are imposed from the Phase II riser to the gasoline storage tank provided there is no vacuum-producing device located between the riser and tank.

1.1.5 **Methodology 5**. This procedure is applicable if the dynamic back pressure standards are imposed at the nozzle/vehicle interface during vehicle fueling.

1.1.6 **Methodology 6**. This procedure shall be conducted in conjunction with the applicable of Methodologies 1, 2, 3 or 4.

1.2 Unless the certification Executive Order specifies otherwise, compliance testing using Methodologies 1, 2, 3, 4 and 6 shall be conducted with the Phase I vapor poppet open, while Methodology 5 shall be conducted with the poppet closed.

1.3 For those systems possessing a design incompatible with this test procedure, compliance testing shall be conducted in accordance with the procedures specified in the applicable certification Executive Order. Appropriate certification testing shall be determined and conducted in accord with sound engineering principles and accepted engineering evaluation criteria.

2. PRINCIPLE AND SUMMARY OF TEST PROCEDURE

2.1 Using Methodologies 1, 2, 3, 4 or 6, the dynamic back pressure during vehicle fueling is simulated by passing nitrogen through the vapor recovery system at specified rates. The resultant dynamic back pressure is measured using a pressure gauge, or equivalent device. Methodologies 2 and 3 are included for those systems that utilize both bellows-equipped nozzles and a remote vapor check valve. Methodology 5 is a direct measurement of the pressure at the nozzle/fillpipe interface during gasoline dispensing.

3. BIASES AND INTERFERENCES

3.1 Any leaks in the nozzle vapor path, fillpipe interface, vapor hose, or underground vapor return piping may result in erroneously low dynamic back pressure measurements.

3.2 Testing of systems that have liquid condensate traps in the underground vapor return piping that contain liquid at the time of the test may result in erroneously high dynamic back pressure measurements.

3.3 Measuring dynamic back pressure without waiting a minimum of 30 seconds for the flow of nitrogen to stabilize may result in erroneous back pressure measurements.

4. SENSITIVITY, RANGE AND PRECISION

4.1 The minimum and maximum dynamic back pressures that can be measured are dependent upon available pressure gauges. The recommended mechanical or electronic pressure gauge ranges are described in Sections 4.2 and 4.3.

4.2 If mechanical pressure gauges are used, the minimum diameter of the gauge face shall be four inches; the minimum accuracy shall be 3.0 percent of full scale and the minimum readability shall be 5.0 percent of full scale.

4.2.1 **Methodology 1**. 0-0.5 and 0-1 inches H_2O.
4.2.2 **Methodology 2**. 0-0.5 and 0-1 inches H_2O.
4.2.3 **Methodology 3**. 0-0.5 and 0-1 inches H_2O.
4.2.4 **Methodology 4**. 0-0.25 inches H_2O.
4.2.5 **Methodology 5**. -1-0-+1 inches H_2O.
4.2.6 **Methodology 6.** 0-0.5 and 0-1 inches H_2O.

4.3 If an electronic pressure measuring device is used, the full-scale range of the device shall not exceed 0-10 inches H_2O with a minimum accuracy of 0.5 percent of full scale. A 0-20 inches H_2O device may be used provided the equivalent accuracy is not less than 0.25 percent of full-scale.

5. EQUIPMENT

5.1 Nitrogen High Pressure Cylinder with Pressure Regulator. Use a high pressure nitrogen cylinder capable of maintaining a pressure of at least 2000 psig and equipped with a compatible two-stage pressure regulator and a one psig relief valve. A ground strap is recommended during introduction of nitrogen into the system.

5.2 Rotameter. Use a calibrated rotameter capable of accurately measuring nitrogen flowrate(s) applicable for the imposed dynamic back pressure limits.

5.3 Pressure Gauges. Use differential pressure gauges as described in Sections 4.2 and 4.3.

Figure 1
Dynamic Back Pressure Test Assembly

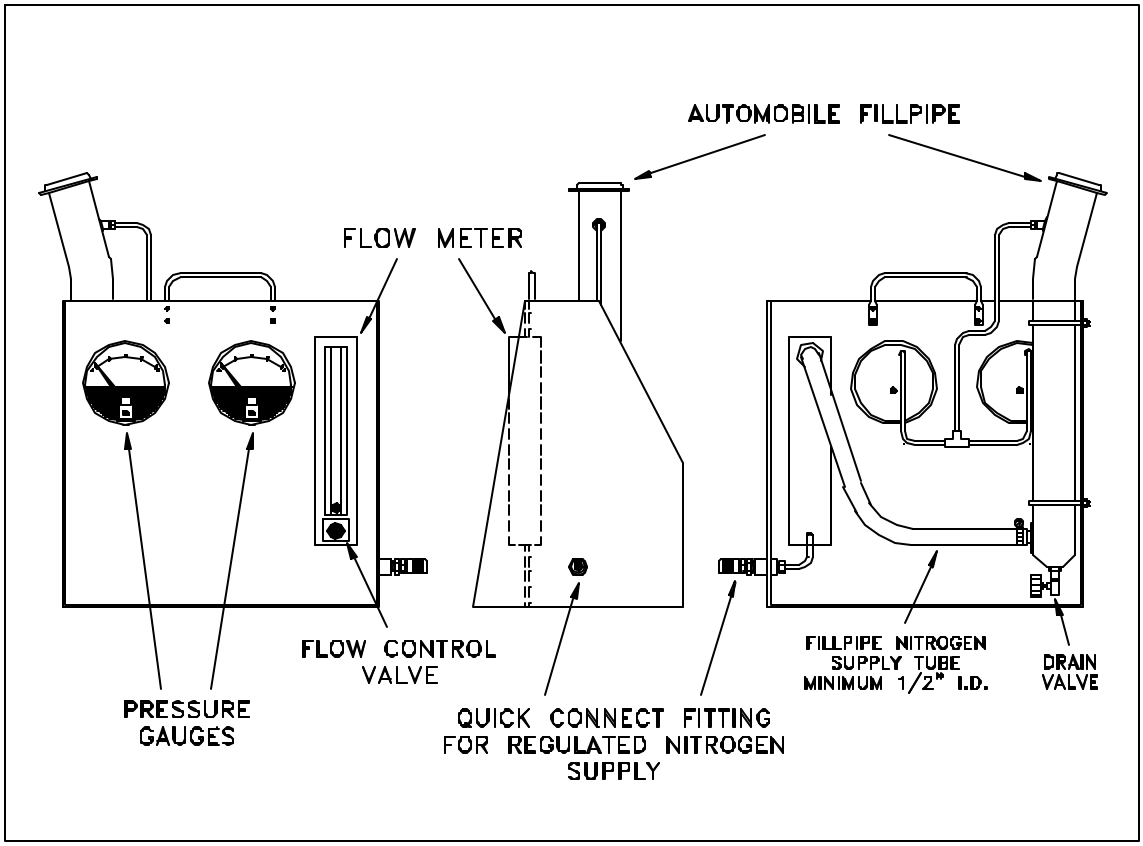

5.4 Fillpipe. Use an automobile fillpipe, or equivalent, known to be compatible with all bellows-equipped vapor recovery nozzles, and equipped with a pressure tap. See Figure 1.

5.5 Nitrogen. Use commercial grade gaseous nitrogen in a high-pressure cylinder, equipped with a two-stage pressure regulator and a one psig pressure relief valve.

5.6 Hand Pump. Use a gasoline compatible hand pump, if applicable, to drain any gasoline from condensate pots.

5.7 Stopwatch. Use a stopwatch accurate to within 0.2 seconds to time the duration of the test.

5.8 Gasket. Use a flat gasket made of a gasoline compatible material with dimensions similar to the donut shown in Figure 4, to ensure proper seal between the nozzle and the Dynamic Back Pressure Assembly.

6. PRE-TEST PROCEDURES

6.1 Methodologies 1, 2 & 3. The following subsections are applicable for those Phase II systems where a limitation is imposed on the dynamic back pressure between the nozzle and the gasoline storage tank. If a central vacuum system is used, this device shall be turned off during this test.

6.1.1 Assemble a Dynamic Back Pressure Test Assembly as shown in Figure 1, ensuring that the rotameter control valve is closed.

Figure 2
Dynamic Pressure Release Assembly

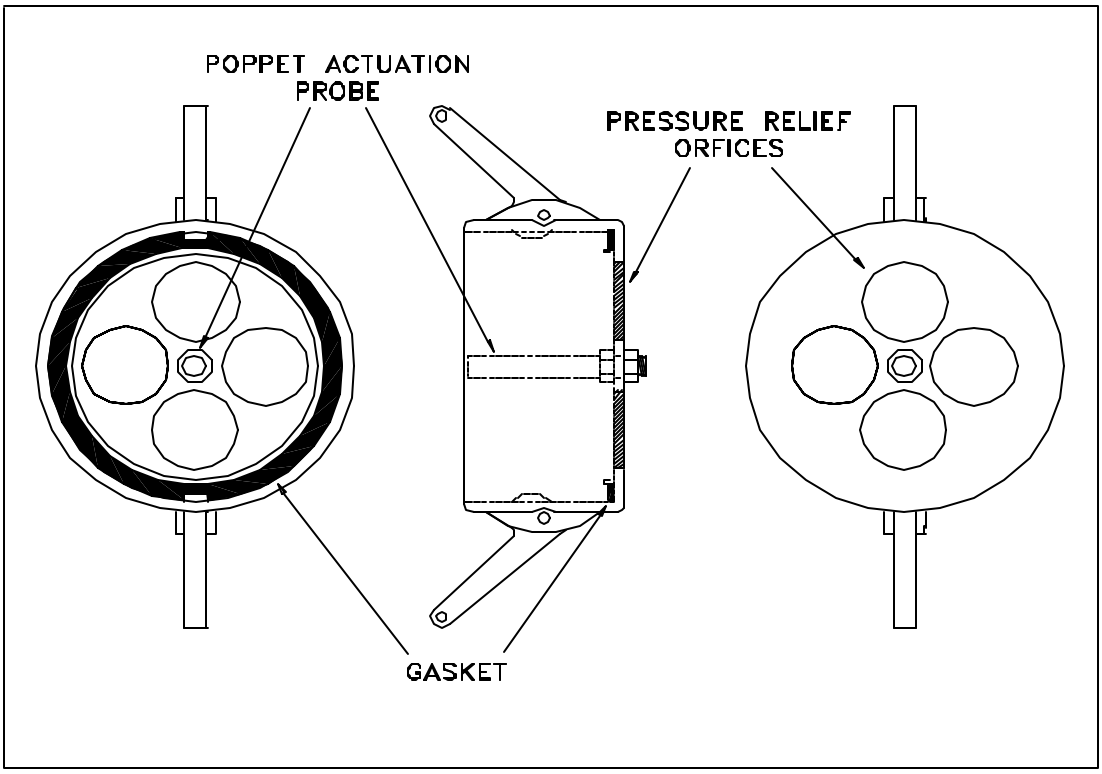

6.1.2 The test equipment must be leak-checked prior to use. Plug the nozzle end of the auto fillpipe on the Dynamic Back Pressure Assembly and open the nitrogen cylinder. Adjust the rotameter control valve until a pressure of 50

percent of full scale is indicated on the high range pressure gauge. Close the nitrogen cylinder valve and any toggle valves. A pressure decay of less than 0.2 inches H_2O, in five minutes, is considered acceptable.

6.1.3 With the Dynamic Back Pressure Assembly open to atmosphere, flow nitrogen through the assembly at each specified flowrate. Record any back pressure on the appropriate data sheet. Allow a minimum of 30 seconds for the nitrogen flow to stabilize before taking back pressure measurement.

6.1.4 Perform an initial visual examination for vapor leaks at the nozzle and hose of the Phase II system to be tested. All leak sources shall be repaired or the component(s) removed and replaced prior to testing.

Figure 3
Capped "T" Assembly

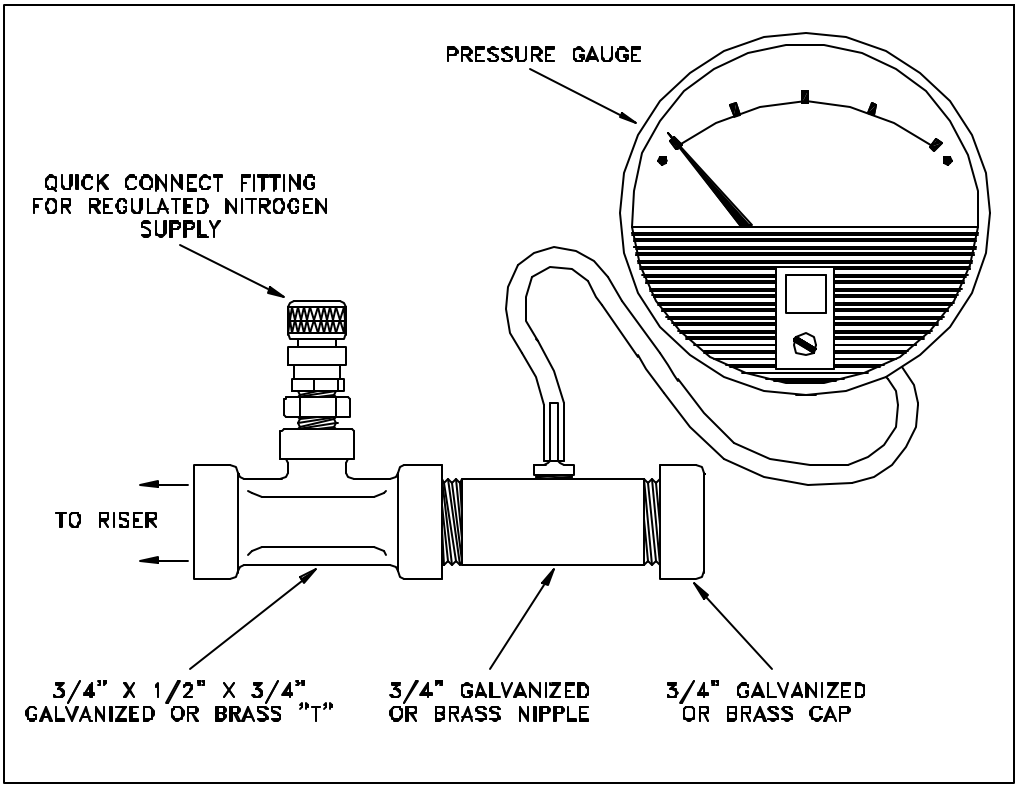

6.1.5 Pour a minimum of two (2) gallons of gasoline into each Phase II vapor return riser. This gasoline may be introduced into the Phase II riser in any appropriate manner. Alternatively, a minimum of twenty gallons of gasoline may be introduced into the Phase II riser furthest from the gasoline storage tank, provided that the riser is common to all products available at that dispenser. If product-specific risers are employed, a minimum of seven gallons, per product grade, may be introduced into the riser of each product that is furthest from the gasoline storage tank. The Districts may waive this requirement in facilities that have been in operation prior to the test. Allow at least fifteen (15) minutes for the liquid in the vapor return piping to drain.

6.1.6 Completely drain any gasoline from the spout and bellows.

6.1.7 For vapor piping configurations that utilize a liquid condensate pot, drain the pot prior to testing.

6.1.8 The Phase I vapor poppet shall be opened in such a manner that the valve is not damaged. This may be accomplished by using either a vapor recovery elbow or a Dynamic Pressure Release Assembly, as shown in Figure 2.

6.2 Methodology 4.

6.2.1 Assemble the Capped "T" Assembly as shown in Figure 3.

6.2.2 With the Capped “T” Assembly open to atmosphere, flow nitrogen through the assembly at each specified flowrate. Record any back pressure on the appropriate data sheet. Allow a minimum of 30 seconds for the nitrogen flow to stabilize before taking back pressure measurement.

6.2.3 Open the Phase I vapor poppet for the affected tank(s), using either methodology described in 6.1.8.

Figure 4

Donut Pressure Test Assembly

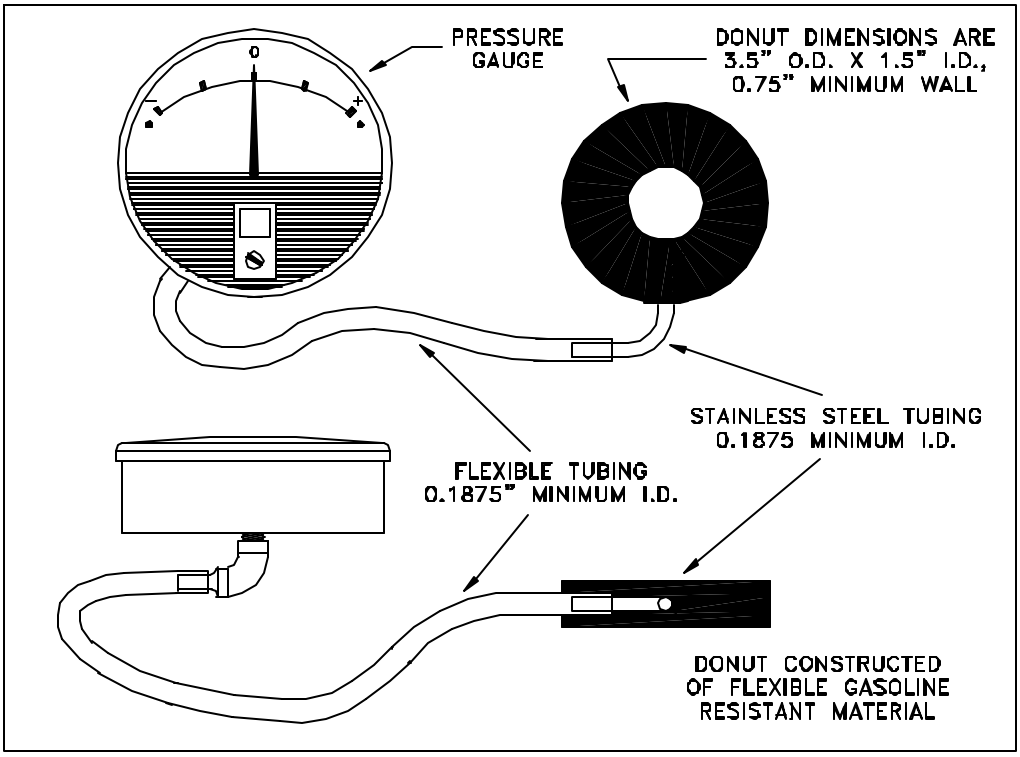

6.2.4 Pour a minimum of two (2) gallons of gasoline into each Phase II vapor return riser. This gasoline may be introduced into the riser in any appropriate manner.

6.5 Methodology 5.

6.5.1 Assemble the Donut Pressure Test Assembly as shown in Figure 4.

6.5.2 The Phase I vapor poppet shall remain closed during this test.

6.6 Methodology 6.

6.6.1 Assemble the Vent Pipe Pressure Assembly as shown in Figure 5.

6.6.2 With the Vent Pipe Pressure Assembly open to atmosphere, flow nitrogen through the assembly at each specified flowrate. Record any back pressure on the appropriate data sheet. Allow a minimum of 30 seconds for the nitrogen flow to stabilize before taking back pressure measurement.

6.6.3 Carefully remove the vent pipe pressure/vacuum (P/V) valve.

6.6.4 Open the Phase I vapor poppet for the affected tank(s), using either methodology described in 6.1.8.

6.6.5 Insure that the collection unit of the Phase II system is turned off.

Figure 5
Vent Pipe Pressure Assembly

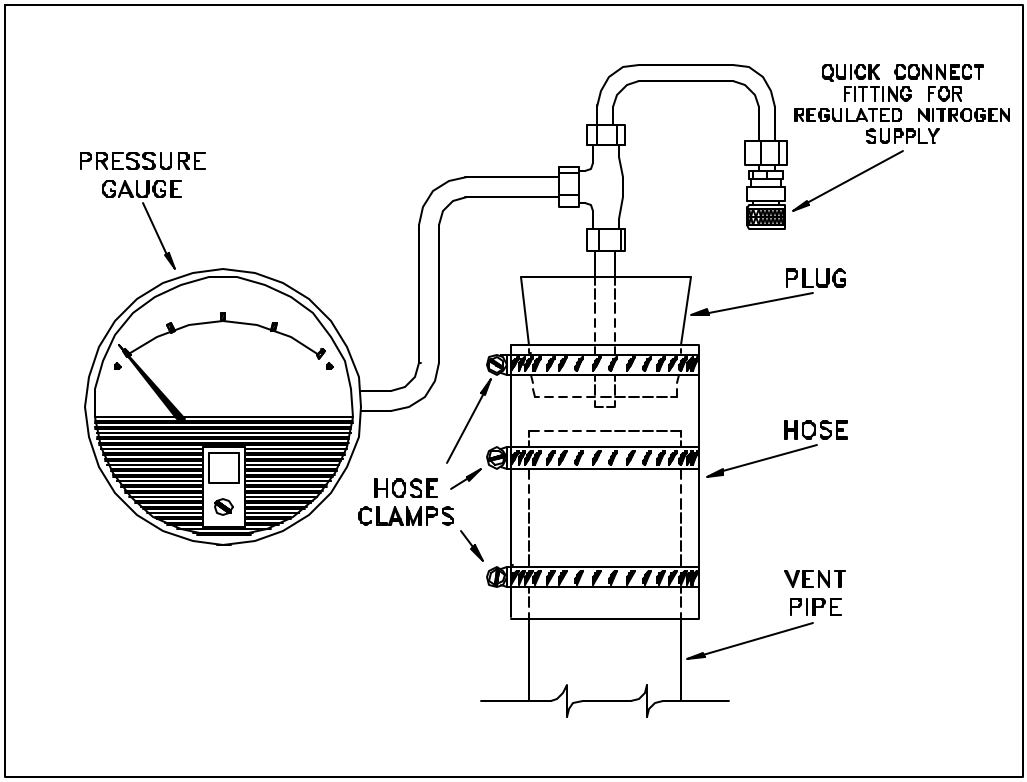

7. TEST PROCEDURE

7.1 Methodology 1. Insert the nozzle into the fillpipe of the Dynamic Back Pressure Test Unit. Ensure that a tight seal is achieved at the fillpipe/nozzle interface. This may be accomplished with the use of a “donut” shaped gasket, as described in Section 5.8

7.1.1 Connect the nitrogen supply to the test assembly.

7.1.2 Open the nitrogen cylinder, set the delivery pressure to 5 psig. Use the rotameter control valve to adjust the flowrate to lowest of the required nitrogen flowrates. Care must be taken to ensure that the initial flowrate through the rotameter does not exceed the lowest specified in the certification Executive Order. If nitrogen has been introduced in excess of the minimum flowrate, then liquid must be introduced, pursuant to section 6.1.5, to conduct a valid test. Allow a minimum of 30 seconds for the nitrogen flow to stabilize before taking back pressure measurement.

7.1.3 A pulsating gauge needle indicates nitrogen passing through a liquid obstruction in the vapor return system. If this occurs, close the rotameter control valve, disengage the nozzle, and redrain the nozzle and hose assembly. Re-engage the nozzle, open the rotameter control valve and repeat Section 7.1.2.

7.1.4 The following information shall be recorded on the field data sheet, as shown on Form 1:

(a) Dispenser Number and Product Grade
(b) Nozzle manufacturer and model
(c) Nitrogen flowrate, CFH
(d) Dynamic back pressure, inches H_2O

7.1.5 Repeat Sections 7.1.1 through 7.1.4 for each additional nitrogen flowrate specified in the certification Executive Order, from the lowest remaining flowrate to the highest.

7.1.6 Remove the vapor recovery elbow or Dynamic Pressure Release Assembly from the Phase I poppet and replace the dust cap.

7.2 Methodology 2. Phase II balance and Hirt systems, which utilize both bellows-equipped nozzles and a fuel-activated remote vapor check valve, may be tested using the following methodology.

7.2.1 Disconnect the vapor recovery hose from the remote vapor check valve. Test the nozzle/hose assembly pursuant to Section 7.1.1 through 7.1.4, and record the results on the field data sheet as shown in Form 2.

7.2.2 Disconnect the vapor check valve and connect a compatible "T" fitting, as shown in Figure 3, to the dispenser at that location.

7.2.3 Connect the nitrogen supply to the "T" assembly.

7.2.4 Repeat Sections 7.1.2 through 7.1.5. In addition to the information required in Section 7.1.4, record both the make and model of the remote vapor check valve.

7.2.5 Record on the field data sheet the pressure drop across the remote vapor check valve. This data is available from the manufacturer.

7.2.6 Add the dynamic back pressures, for each required nitrogen flowrate, obtained from Sections 7.2.1, 7.2.4 and 7.2.5 as shown in Form 2.

7.2.7 Disconnect the “T” fitting from the dispenser and re-connect the vapor check valve.

7.2.8 Remove the vapor recovery elbow or Dynamic Pressure Release Assembly from the Phase I poppet and replace the dust cap.

7.3 Methodology 3. Phase II balance and Hirt systems which use both bellows-equipped nozzles and those models of fuel-activated remote vapor check valves which can be disabled by removing the poppet on the fuel side may be tested using the following methodology. Phase II systems using an Emco-Wheaton A-228 remote vapor check valve cannot be tested using this methodology.

7.3.1 Carefully open the fuel side of the remote vapor check valve and remove the fuel poppet. Carefully replace the threaded plug on the fuel side of the valve.

7.3.2 Test the Phase II system pursuant to Sections 7.1.1 through 7.1.5, recording the data on the field data sheet shown in Form 1.

7.3.3 Carefully reassemble the remote vapor check valve by removing the plug on the fuel side and reinserting the fuel poppet. Replace the threaded fuel plug, taking care not to strip the threads.

7.3.4 Remove the vapor recovery elbow or Dynamic Pressure Release Assembly from Phase I poppet and replace dust cap.

7.4 Methodology 4 Those Phase II systems subject to regulatory limitations on the dynamic back pressure between the Phase II riser and gasoline storage tank may be tested using this methodology.

7.4.1 Disconnect the Phase II vapor riser and install the "T" assembly as shown in Figure 3.

7.4.2 Connect the nitrogen supply to the "T" assembly.

7.4.3 Open the nitrogen cylinder, set the delivery pressure to 5 psig. Use the rotameter control valve to adjust the flowrate to lowest of the required nitrogen flowrates. Care must be taken to ensure that the initial flowrate through the rotameter does not exceed the lowest specified in the Executive Order. If nitrogen has been introduced in excess of the minimum flowrate, then liquid must be introduced, pursuant to section 6.1.5, to conduct a valid test. Allow a minimum of 30 seconds for the nitrogen flow to stabilize before taking back pressure measurement.

7.4.4 A pulsating gauge needle indicates nitrogen passing through a liquid obstruction in the vapor return system. If this occurs, close the rotameter control valve, disengage the nozzle, and redrain the nozzle and hose assembly. Re-engage the nozzle, open the rotameter control valve and repeat Section 7.4.3.

7.4.5 The following information shall be recorded on the field data sheet, as shown in Form 3:

(a) Dispenser Number and Product Grade
(b) Nitrogen flowrate, CFH
(c) Dynamic back pressure, inches H_2O

7.4.6 Repeat subsections 7.4.3 through 7.4.5 for all required nitrogen flowrates, as specified in CP-201.

7.4.7 Remove the “T” assembly and re-connect the Phase II vapor riser.

7.4.8 Remove the vapor recovery elbow or Dynamic Pressure Release Assembly from the Phase I poppet and replace the dust cap.

7.5 Methodology 5. Those bellows-equipped Phase II systems subject to regulatory limitations on the dynamic back pressure at the nozzle/fillpipe interface during gasoline dispensing shall use the following methodology.

7.5.1 Assemble the Donut Pressure Test Assembly, shown in Figure 4.

7.5.2 Insert the nozzle spout through the inner hole of the donut.

7.5.3 Insert and latch the nozzle in the vehicle fillpipe. Visually ensure that a tight connection is made between the donut and fillpipe.

7.5.4 Activate the dispenser and set the nozzle hold-open latch on low. After at least one gallon has been dispensed start the stopwatch. Dispense a minimum of four gallons of gasoline. The following data shall be recorded on the field data sheet as shown in Form 4:

(a) Dispenser Number and gasoline grade
(b) Gallons dispensed during test
(c) Maximum dynamic back pressure, inches H_2O
(d) Minimum dynamic back pressure, inches H_2O
(e) The average dispensing rate, gallons per minute

7.5.5 This Methodology shall only be conducted with the Phase I vapor poppet closed, since gasoline is being dispensed during the test.

7.6 Methodology 6. This procedure verifies proper drainage of gasoline from the base of the vent pipe to the gasoline storage tank.

7.6.1 After verifying certification or compliance with the dynamic back pressure standards, pursuant to the applicable of Methodologies 1, 2, 3, or 4, close the Phase I vapor poppet.

7.6.2 Remove the pressure/vacuum (P/V) valve(s) from each vent pipe.

7.6.3 Carefully pour a minimum of 5 gallons of gasoline down each vent pipe.

7.6.4 Wait at least 15 minutes.

7.6.5 Open the Phase I poppet(s) on all affected tanks, per section 6.1.8.

7.6.6 Install the Vent Pipe Pressure Assembly as shown in Figure 5.

7.6.7 Connect the nitrogen supply to the Vent Pipe Pressure Assembly.

7.6.8 Open the nitrogen cylinder and adjust the flowrate to 60 CFH.

7.6.9 After a minimum of 30 seconds, record the dynamic back pressure.

7.6.10 A dynamic back pressure, from the top of the vent pipe to the storage tank, of less than 0.5 inches H_2O shall be considered acceptable.

7.6.11 Repeat steps 7.6.6 through 7.6.10 for each vent stack that has a P/V valve.

7.6.12 Remove the Vent Pipe Pressure Assembly from the vent pipe and replace the pressure/vacuum (P/V) valve(s).

7.6.13 Remove the vapor recovery elbow or Dynamic Pressure Release Assembly from the Phase I poppet and replace the dust cap.

8. POST-TEST PROCEDURES

Refer to each methodology for the appropriate post-test procedure.

9. REPORTING RESULTS

9.1 Report the results of the dynamic back pressure test as shown below:

9.1.1	Methodology 1	Form 1
9.1.2	Methodology 2	Form 2
9.1.3	Methodology 3	Form 1
9.1.4	Methodology 4	Form 3
9.1.5	Methodology 5	Form 4
9.1.6	Methodology 6	Forms 1, 2, 3, or 4, as appropriate

10. ALTERNATE PROCEDURES

10.1 This procedure shall be conducted as specified. Modifications to this test procedure shall not be used to determine compliance unless prior written approval has been obtained from the ARB Executive Officer, pursuant to Section 14 of Certification Procedure CP-201.

Form 1

	Dynamic Back Pressure Source Test Results	**Report No.:** _____ **Test Date:** _____ **Test Times:** **Run A:** _____

Source Information		**Representatives**
Station Name and Address	Station Representative and Title Phone No.	Source Test Engineers
Permit Conditions:	Source: **GDF Vapor Recovery** **GDF #** _____ **A/C #** _____	Permit Services Division/Enforcement Division Test Requested By:
Operating Parameters:		
Applicable Regulations:		VN Recommended:

Sources Test Results and Comments:

Nozzle #	Gas Grade	Nozzle Model	Dynamic Back Pressure, Inches H_2O		
			CFH	CFH	CFH

Results Received by	Date	Results Reviewed by	Date	Results Approved/Disapproved

Form 2

Station Name and Address	**Dynamic Back Pressure Source Test Results**	Station Representative and Title Phone No.
Permit Services/Enforcement:		Test Performed by:
Permit Conditions:		Test Date/Time:
Applicable Regulations:	Source: **GDF Vapor Recovery GDF # A/C #**	VN Recommendation:

Source Test Results and Comments:

Pump #	Gas Grade	Nozzle Model	Vapor Valve Make/Model	Nitrogen Flow, CFH	Dynamic Back Pressure, Inches of Water Column: Nozzle/Hose Assembly	Riser to U.G. Tank	Vapor Valve	Total Δ P, Inches H_20

Test Received by:	Date:	Test Reviewed by:	Date:	Test Approved/Disapproved:	Date:

Form 3

	Dynamic Back Pressure Source Test Results	**Report No.:** _____ **Test Date:** _____ **Test Times:** **Run A:** _____

Source Information		**Representatives**
Station Name and Address	Station Representative and Title Phone No.	Source Test Engineers
Permit Conditions:	Source: **GDF Vapor Recovery** **GDF #** _____ **A/C #** _____	Permit Services Division/Enforcement Division Test Requested By:
Operating Parameters:		
Applicable Regulations:		VN Recommended:

Sources Test Results and Comments:

Riser #	Gas Grade	Dynamic Back Pressure, Inches H_2O		
		CFH	CFH	CFH

Results Received by	Date	Results Reviewed by	Date	Results Approved/Disapproved

Form 4

	Dynamic Back Pressure Source Test Results	**Report No.:** _____ **Test Date:** _____ **Test Times:** **Run A:** _____

Source Information		**Representatives**
Station Name and Address	Station Representative and Title Phone No.	Source Test Engineers
Permit Conditions:	Source: **GDF Vapor Recovery** **GDF #** _____ **A/C #** _____	Permit Services Division/Enforcement Division Test Requested By:
Operating Parameters:		
Applicable Regulations:		VN Recommended:

Sources Test Results and Comments:

Nozzle #	Gas Grade	Gallons Dispensed	Dynamic Back Pressure, In. H_2O		
			Max. B.P.	Min. B.P.	Rate, GPM

Results Received by	Date	Results Reviewed by	Date	Results Approved/Disapproved